GOOD TO KNOW

HOW TO FIX A CONCRETE GROUND FIXATION?

Don't forget!

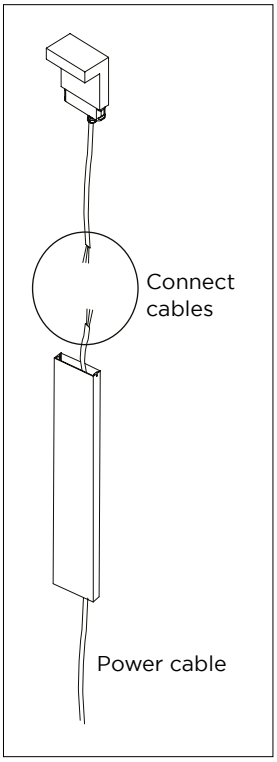

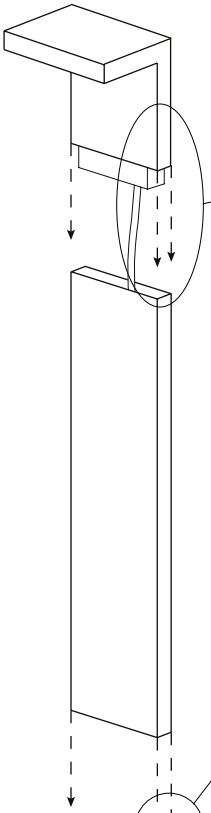

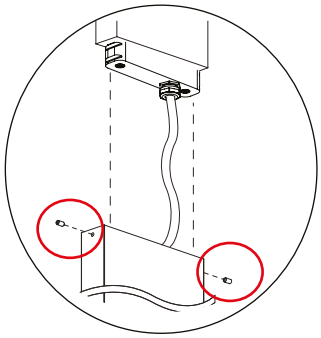

Connect both parts by means of the screws.

When the concrete is dry, slide the base over the ground fixation and fix with the screws.

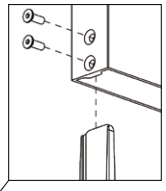

Put the ground fixation in the liquid concrete. Make sure it can dry with the ground fixation leveled.

Only this area in concrete

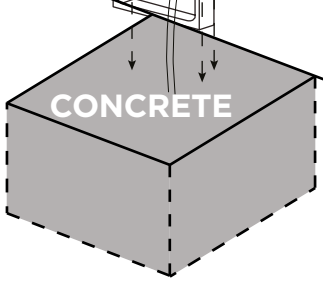

Dig a hole in the ground and pour concrete in it. Make sure to foresee some tubes for the power cables!
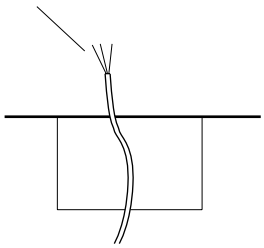
Tube with power cable